1	2	3	4	5	6	7	8	9	10

POWER CIRCUIT

TRAVELLING POWER SUPPLY SYSTEM

ADDRESS NO. A1

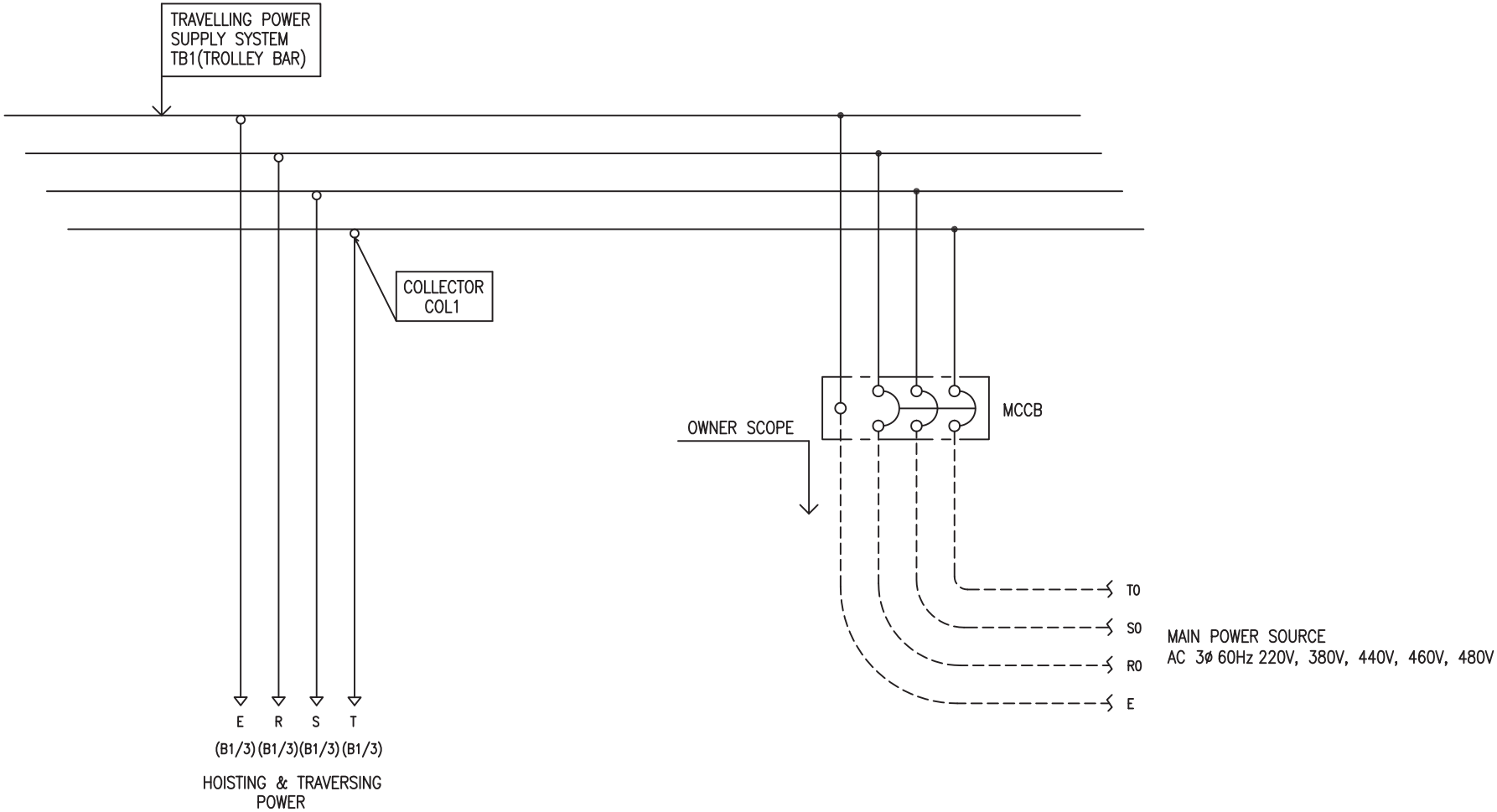

-NOTE-

1. — — — — MARKED OWNER SCOPE
2. ———— MARKED CRANE MAKER SCOPE

TITLE				PROJECTION	
MAIN POWER CIRCUIT DIAGRAM1					
WORK NO	WORK NAME			SCALE	Q' TY
601	DBM 220V, 380V, 440V, 460V, 480V			1/1	1
DRAWN	CHECKED	REVIEWED	APPROVED	DRAWING NO	DBM
LEE G.H.				CODE NO	
2010.07.30					

L K HOIST CO., LTD.

1	2	3	4	5	6	7	8	9	10	
POWER CIRCUIT					CONTROL CIRCUIT				ADDRESS NO.	B1

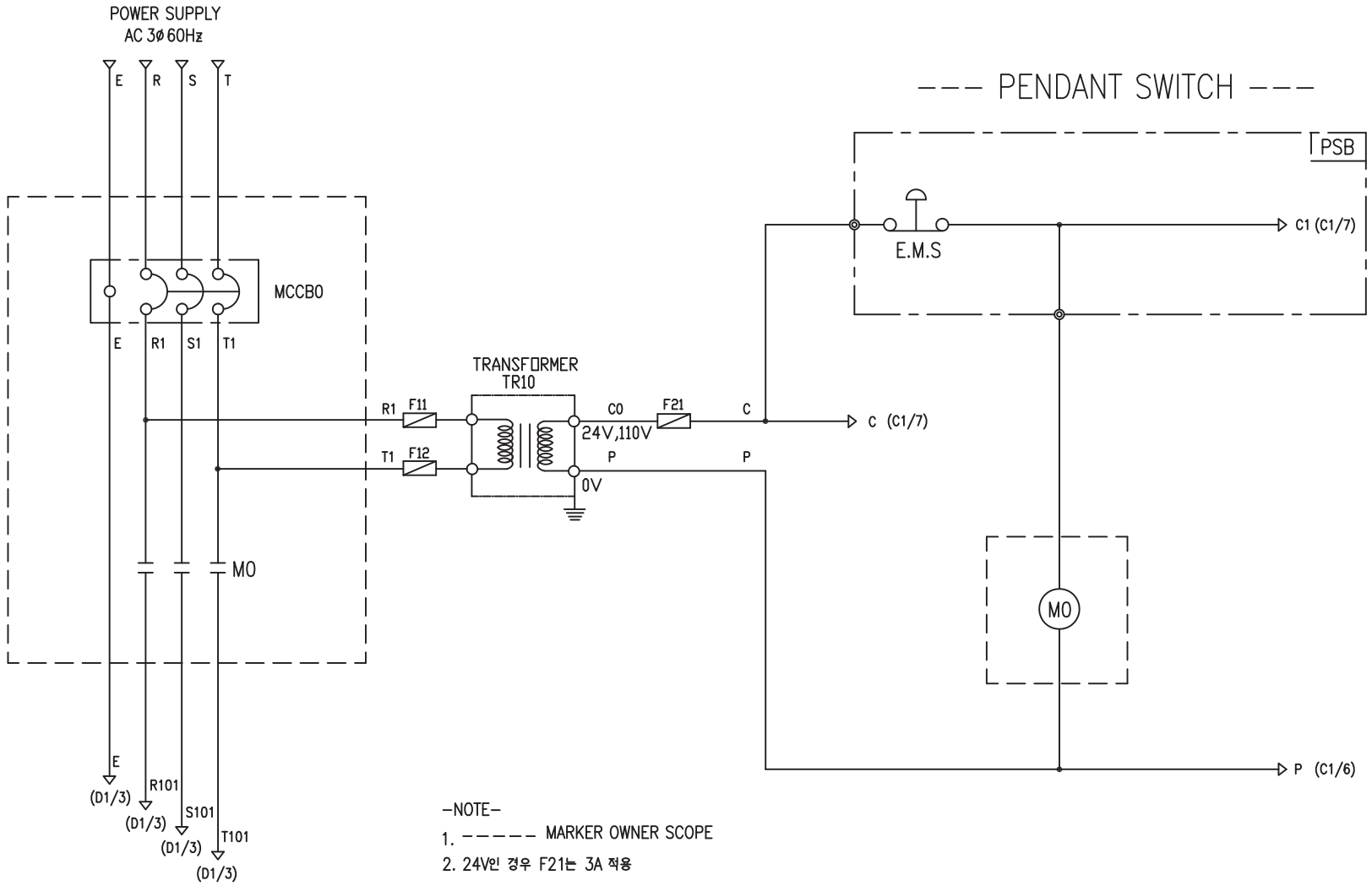

-NOTE-

1. ----- MARKER OWNER SCOPE
2. 24V인 경우 F21는 3A 적용

SPECIFICATION	NO FUSE BREAKER		MAGNET CONTACT		TRANSFORMER	FUSE
SYMBOLS	MCCBO		MO		TR10	F11, F12, F21
DESCRIPTION	220V	50A	GMC22	DMC22	60VA	1A
	380V	30A				
	440V	30A				
	460V	30A				
	480V	30A				
MAKER	LS		LS	DONGA	LK	-

TITLE				PROJECTION	
MAIN POWER & CONTROL CIRCUIT DIAGRAM					
WORK NO	WORK NAME			SCALE	Q' TY
602	DBM			1/1	1
	220V, 380V, 440V, 460V, 480V				
DRAWN	CHECKED	REVIEWED	APPROVED	MODEL	DBM
LEE.G.H				CODE NO	
2010.07.30					

LK L K HOIST CO., LTD.

1	2	3	4	5	6	7	8	9	10	
HOIST POWER CIRCUIT					HOIST CONTROL CIRCUIT				ADDRESS NO.	C1

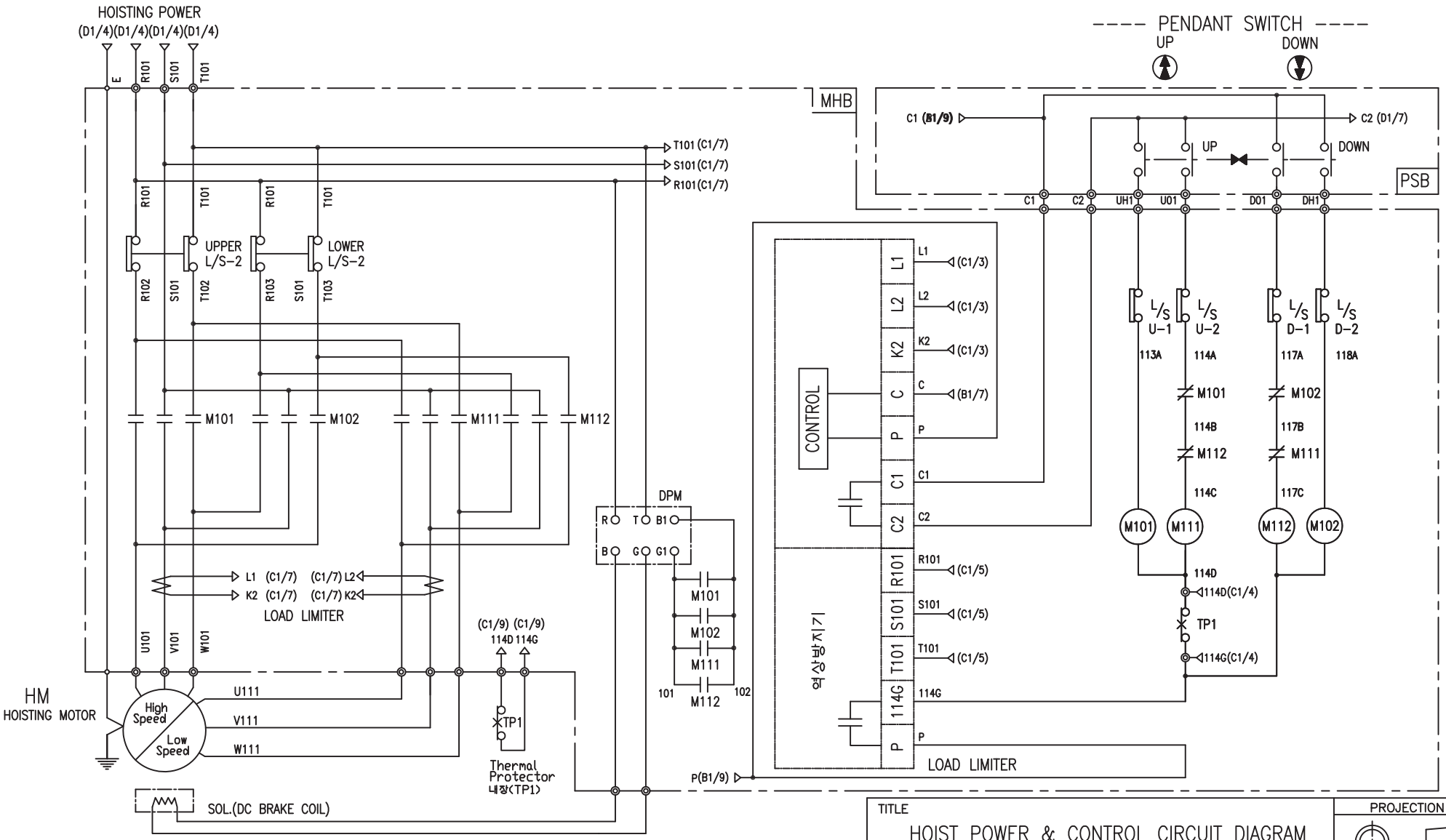

-NOTE-

1. ⊣⊢ : Mechanical Interlock

SPECIFICATION	MAGNET CONTACT	LOAD LIMITER	SILICON RECTIFIER				Thermal Protector	HOIST MOTOR
SYMBOLS	M101, M102 M103, M104	–	DPM				TP1	HM
			AC380V	AC440V	AC460V	AC480V		
DESCRIPTION	DMC22	LKDL-601	DC171V	DC198V	DC207V	DC216V	17AM032	4.4Kw * 2P/2.2Kw*6P
MAKER	DONG-A	LK	LK				Texas Instruments	LK

TITLE				PROJECTION
HOIST POWER & CONTROL CIRCUIT DIAGRAM				
WORK NO	WORK NAME			SCALE / Q' TY
604	DBM 380V, 440V, 460V, 480V			1/1 / 1
DRAWN	CHECKED	REVIEWED	APPROVED	MODEL: DBM
LEE.G.H				CODE NO
2010.07.30				

LK L K HOIST CO., LTD.

1	2	3	4	5	6	7	8	9	10	
TRAVERSING POWER CIRCUIT					TRAVERSING CONTROL CIRCUIT				ADDRESS NO.	D1

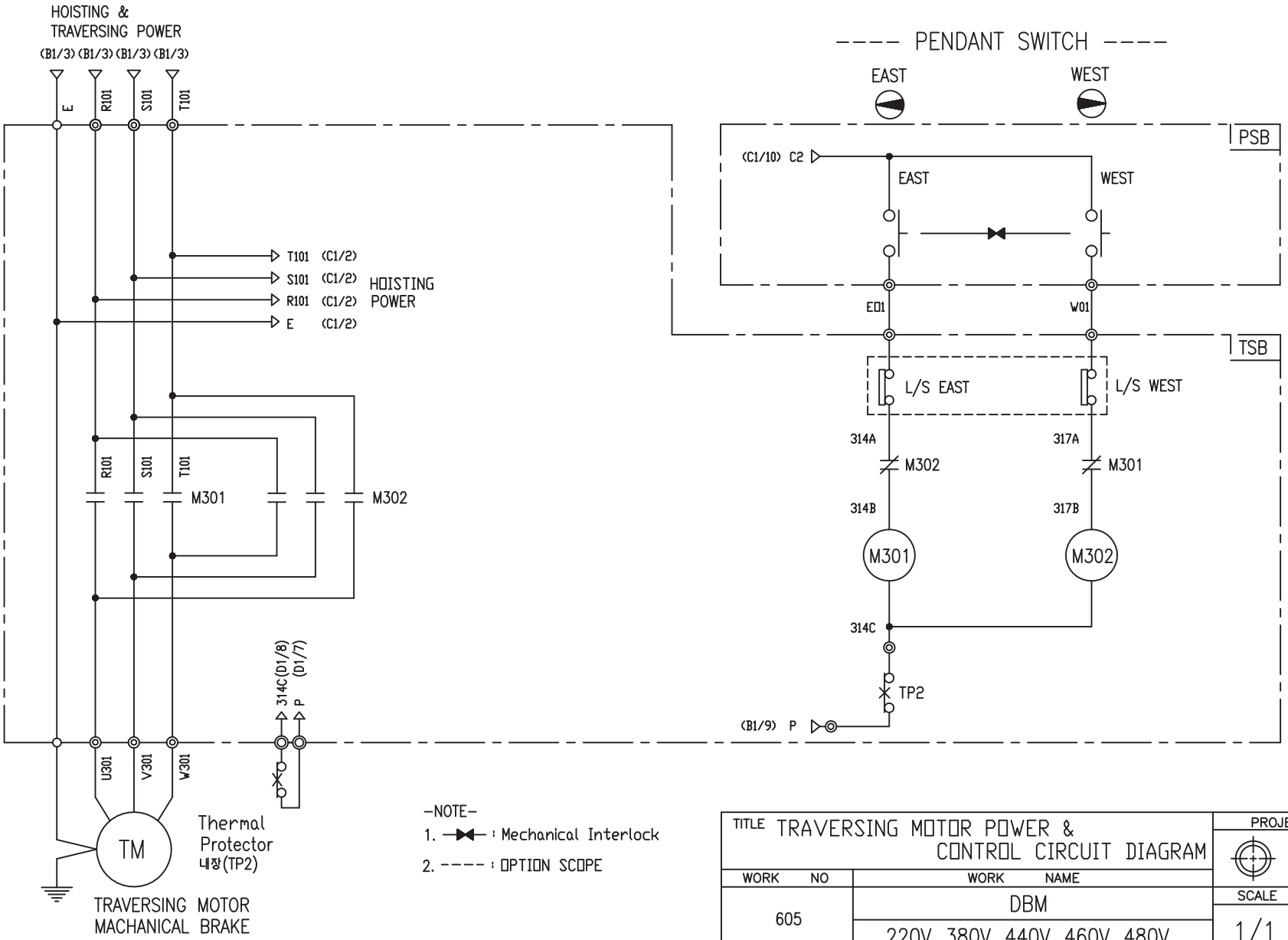

-NOTE-

1. ⊣⊢ : Mechanical Interlock
2. ---- : OPTION SCOPE

SPECIFICATION	MAGNET CONTACT		Thermal Protector	TRAVERSING MOTOR	
SYMBOLS	M301, M302		TP2	TM	
DESCRIPTION	GMC12	DMC12	17AM032	0.75KW *4P	0.4KW *6P
MAKER	LS	DONGA	Texas Instruments	LK	

TITLE	TRAVERSING MOTOR POWER & CONTROL CIRCUIT DIAGRAM				PROJECTION
WORK NO	WORK NAME				
605	DBM				SCALE 1/1 / Q' TY 1
	220V, 380V, 440V, 460V, 480V				
DRAWN	CHECKED	REVIEWED	APPROVED	MODEL	DBM
LEE.G.H				CODE NO	
2010.07.30					

L K HOIST CO., LTD.

1	2	3	4	5	6	7	8	9	10	
TRAVERSING POWER CIRCUIT					TRAVERSING CONTROL CIRCUIT				ADDRESS NO.	D1

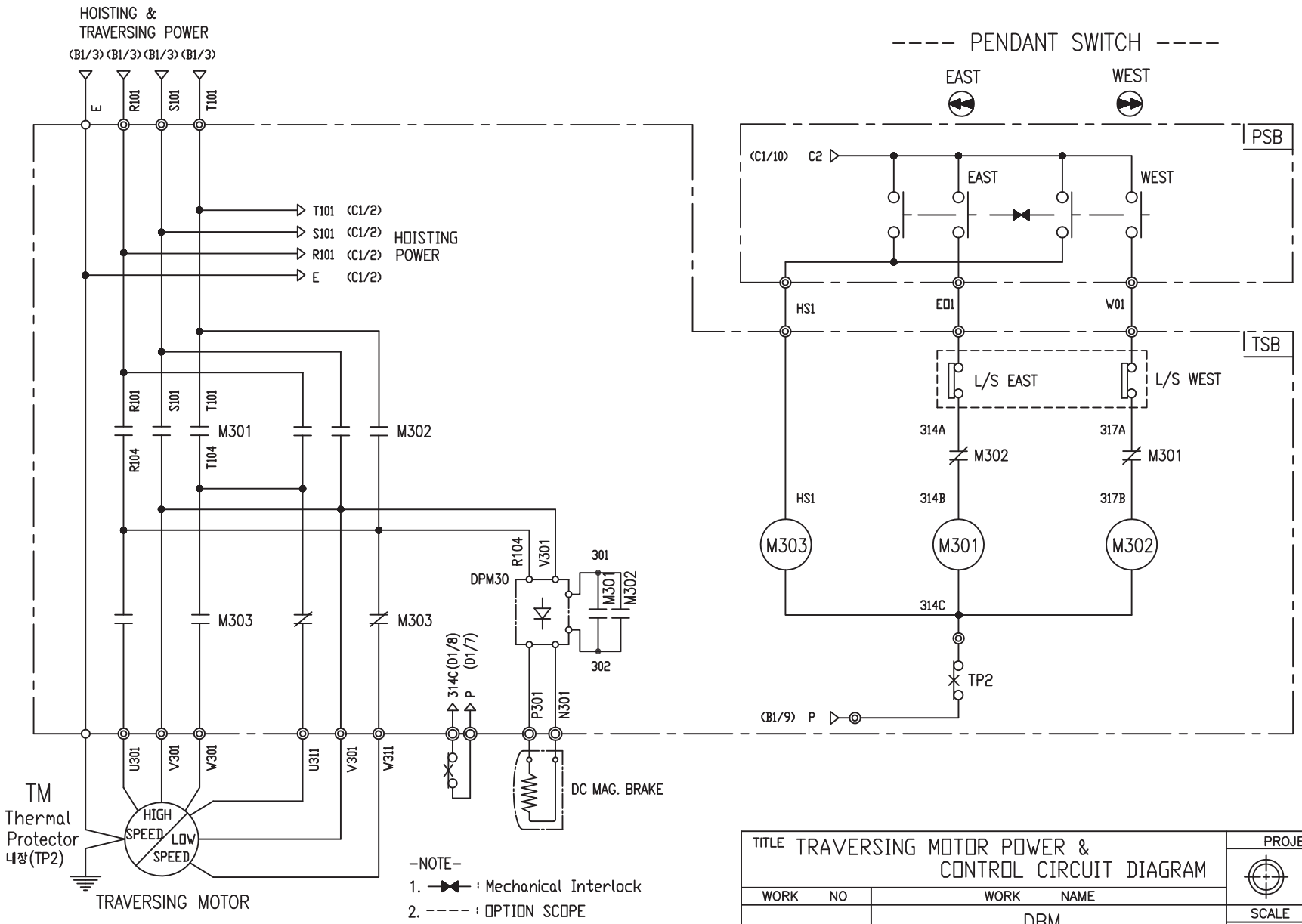

-NOTE-

1. ⊸⊷ : Mechanical Interlock
2. ---- : OPTION SCOPE

SPECIFICATION	MAGNET CONTACT		Thermal Protector	SILICON RECTIFIER					TRAVERSING MOTOR
SYMBOLS	M301, M302, M303		TP2	DPM30					TM
DESCRIPTION	GMC12	DMC12	17AM032	AC220V	AC380V	AC440V	AC460V	AC480V	0.75/0.25KW *4/12P
				DC99V	DC171V	DC198V	DC207V	DC216V	
MAKER	LS	DONGA	Texas Instruments	LK					LK

TITLE	TRAVERSING MOTOR POWER & CONTROL CIRCUIT DIAGRAM				PROJECTION
WORK NO	WORK NAME				
606	DBM				SCALE 1/1
	220V, 380V, 440V, 460V, 480V				Q' TY 1
DRAWN	CHECKED	REVIEWED	APPROVED	MODEL	DBM
LEE.G.H				CODE NO	
2010.07.30					

L K HOIST CO., LTD.

SCHEDULE OF TECHNICAL DATA

1. SERVICE	HOISTING
2. MANUFACTURE	LK HOIST CO. LTD
3. MOTOR MODEL NO	4.4/2.2 - 2/6 - 46
4. RATED POWER	4.4/2.2 KW × 2/6 P
5. RATED VOLTAGE AND FREQUENCY	460 V 60HZ
6. MOTOR TYPE	SQUIRREL CAGE ROTOR TYPE
7. RATING	30 MIN
8. LOCATION	OUTDOOR
9. INSULATION CLASS	B
10. DESIGN TEMPERATURE RISE (BY RESISTANCE)	80℃
11. FULL LOAD SPEED	3440/1140 RPM
12. FULL LOAD CURRENT	11/5.3 A
13. STARTING CURRENT AT RATED VOLTAGE	54/28 A
14. MINIMUM STARTING VOLTAGE	414 V
15. EFFICIENCY AT 100% RATED LOAD	73/73 %
16. POWER FACTOR AT 100% RATED LOAD	71/71 %
17. STARTING TORQUE	243 %
18. TYPE OF ENCLOSURE	전폐형
19. TYPE OF BEARING	PL : 6205DD OPL : 6008ZZ
20. MOUNTING	VERTICAL
21. MAXIMUM AMBIENT TEMPURE	40℃
22. BEARING LUBRICATION	GREASE
23. STARTING METHOD	FULL VOLTAGE

SCHEDULE OF TECHNICAL DATA

1. SERVICE	TRAVERSING
2. MANUFACTURE	LK HOIST CO. LTD
3. MOTOR MODEL NO	0.75 - 4 - 46
4. RATED POWER	0.75 KW × 4 P
5. RATED VOLTAGE AND FREQUENCY	460 V 60HZ
6. MOTOR TYPE	SQUIRREL CAGE ROTOR TYPE
7. RATING	15 MIN
8. LOCATION	OUTDOOR
9. INSULATION CLASS	B
10. DESIGN TEMPERATURE RISE (BY RESISTANCE)	100℃
11. FULL LOAD SPEED	1670 RPM
12. FULL LOAD CURRENT	2.3 A
13. STARTING CURRENT AT RATED VOLTAGE	12.6 A
14. MINIMUM STARTING VOLTAGE	414 V
15. EFFICIENCY AT 100% RATED LOAD	65 %
16. POWER FACTOR AT 100% RATED LOAD	63 %
17. STARTING TORQUE	250 %
18. TYPE OF ENCLOSURE	전폐형
19. TYPE OF BEARING	PL : 6008DD OPL : 6207ZZ
20. MOUNTING	VERTICAL
21. MAXIMUM AMBIENT TEMPURE	40℃
22. BEARING LUBRICATION	GREASE
23. STARTING METHOD	FULL VOLTAGE

SCHEDULE OF TECHNICAL DATA

1. SERVICE	TRAVERSING
2. MANUFACTURE	LK HOIST CO. LTD
3. MOTOR MODEL NO	0.4 - 6 - 46
4. RATED POWER	0.4 KW × 6 P
5. RATED VOLTAGE AND FREQUENCY	460 V 60HZ
6. ROTOR TYPE	SQUIRREL CAGE ROTOR TYPE
7. RATING	15 MIN
8. LOCATION	OUTDOOR
9. INSULATION CLASS	B
10. DESIGN TEMPERATURE RISE (BY RESISTANCE)	100℃
11. FULL LOAD SPEED	1140 RPM
12. FULL LOAD CURRENT	1.53 A
13. STARTING CURRENT AT RATED VOLTAGE	8.4 A
14. MINIMUM STARTING VOLTAGE	414 V
15. EFFICIENCY AT 100% RATED LOAD	65 %
16. POWER FACTOR AT 100% RATED LOAD	63 %
17. STARTING TORQUE	249 %
18. TYPE OF ENCLOSURE	전폐형
19. TYPE OF BEARING	PL : 6008DD OPL : 6207ZZ
20. MOUNTING	VERTICAL
21. MAXIMUM AMBIENT TEMPERATURE	40℃
22. BEARING LUBRICATION	GREASE
23. STARTING METHOD	FULL VOLTAGE

SCHEDULE OF TECHNICAL DATA

1. SERVICE	TRAVERSING
2. MANUFACTURE	LK HOIST CO. LTD
3. MOTOR MODEL NO	0.75/0.25 - 4/12 - 46
4. RATED POWER	0.75/0.25 KW × 4/12 P
5. RATED VOLTAGE AND FREQUENCY	460 V 60HZ
6. MOTOR TYPE	SQUIRREL CAGE ROTOR TYPE
7. RATING	15 MIN
8. LOCATION	OUTDOOR
9. INSULATION CLASS	B
10. DESIGN TEMPERATURE RISE (BY RESISTANCE)	100℃
11. FULL LOAD SPEED	1670 / 550 RPM
12. FULL LOAD CURRENT	2.3 / 1.44 A
13. STARTING CURRENT AT RATED VOLTAGE	12.7 / 7.92 A
14. MINIMUM STARTING VOLTAGE	414 V
15. EFFICIENCY AT 100% RATED LOAD	65 / 48 %
16. POWER FACTOR AT 100% RATED LOAD	63 / 45 %
17. STARTING TORQUE	250 / 243 %
18. TYPE OF ENCLOSURE	전폐형
19. TYPE OF BEARING	PL : 6008DD OPL : 6207ZZ
20. MOUNTING	VERTICAL
21. MAXIMUM AMBIENT TEMPURE	40℃
22. BEARING LUBRICATION	GREASE
23. STARTING METHOD	FULL VOLTAGE